SAUTER

Mischhahn und Antrieb
Robinet mélangeur et servomoteur
Mixing cock and actuator
Valvola e servomotore
Válvula de sector y servomotor
Blandningsventil och drivning
Mengkraan en servomotor

Montagevorschrift
Instructions de montage
Fitting instructions
Istruzioni di montaggio
Instrucciones de montaje
Monteringsanvisning
Montagevoorschrift

ASM105(S) ASM115(S) MH 32 . .

ASM105(S) ASM115(S) MH 42R

1

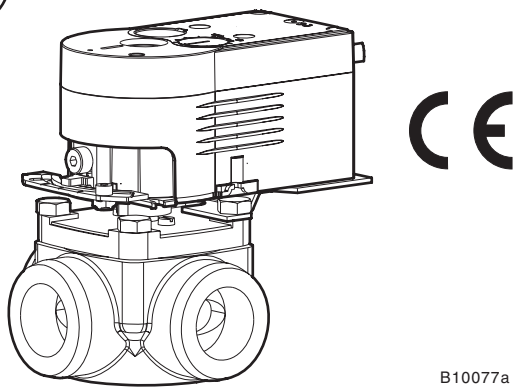

2

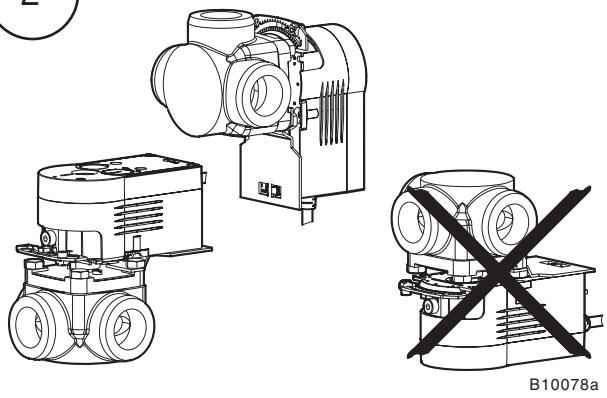

3.1

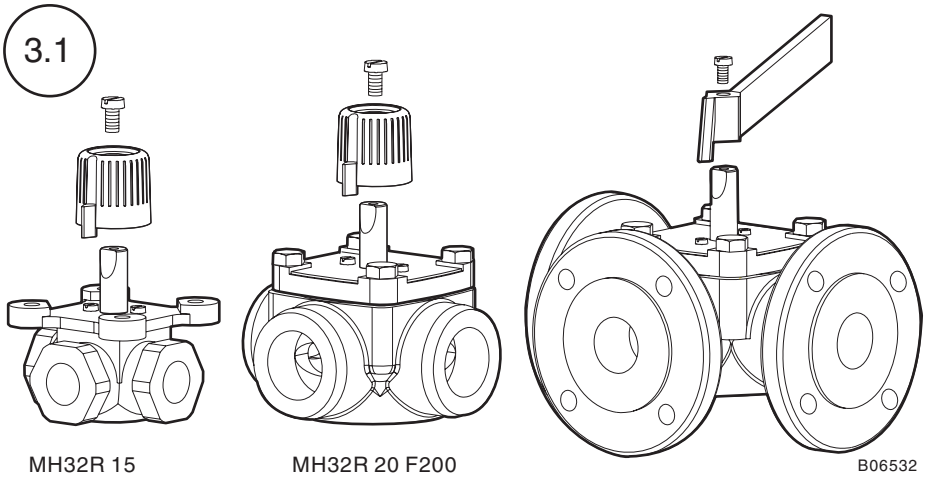

MH32R 15
MH32R 20 F210
MH42R 15
MH42R 20 F210

MH32R 20 F200
MH32R 25 ... 50
MH42R 20 F200
MH42R 25 ... 40

MH32F 20 ... 80

3.2

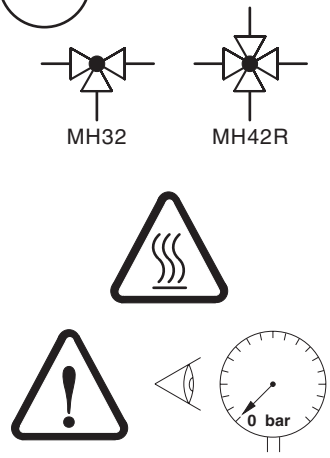

4

MH32

Var. A

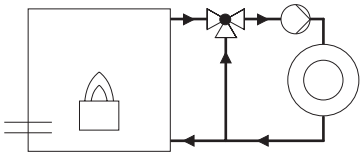

Var. C

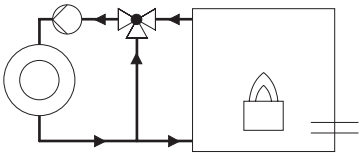

Var. B

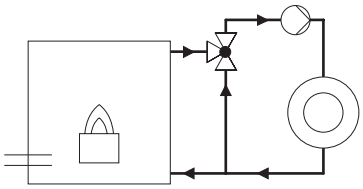

Var. D

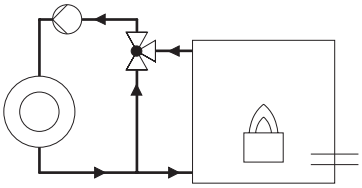

MH42R

Var. E

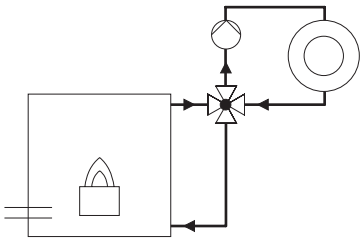

Var. F

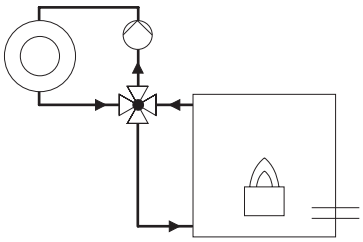

B06533

5

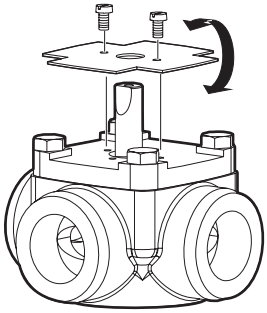

MH32

Var. A

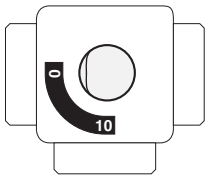

Var. C

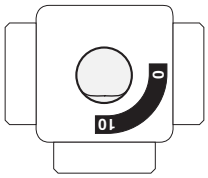

Var. B

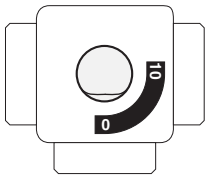

Var. D

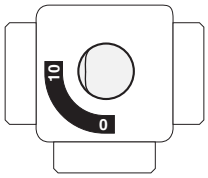

MH42R

Var. E

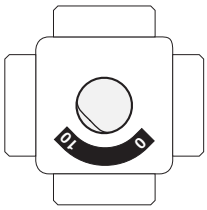

Var. F

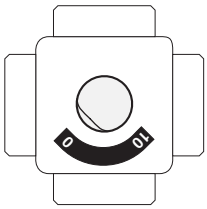

B10079a

6

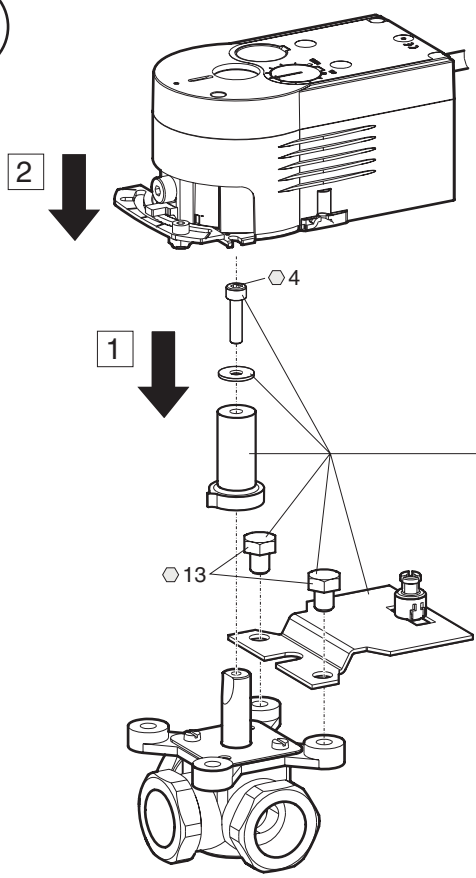

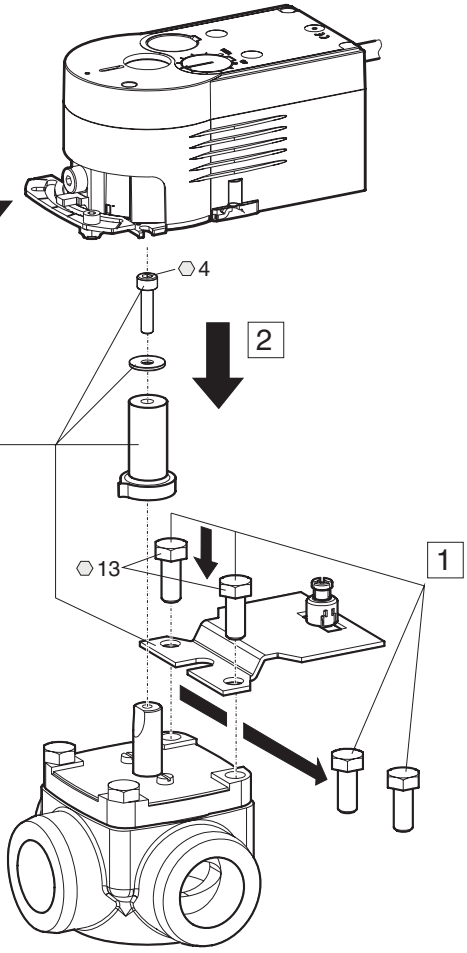

0361977 002

MH32F 32 F200
MH32F 40 F200
MH32F 50 F200
MH32F 65 F200
MH32F 80 F200

MH32R 15 F200
MH32R 20 F210

MH42R 15 F200
MH42R 20 F210

MH32F 20 F200
MH32F 25 F200

MH32R 20 F200
MH32R 25 F200
MH32R 32 F200
MH32R 40 F200
MH32R 50 F200

MH42R 20 F200
MH42R 25 F200
MH42R 32 F200
MH42R 40 F200

B10080

Dokument aufbewahren/Ce document est à conserver/Retain this document/Conservare il documento/Guardar el documento/
Spara dokumenationen/Document bewaren

© Fr. Sauter AG CH-4016 Basel (Schweiz)
Tel. +41 61 - 695 55 55 Fax +41 61 - 695 55 10
http://www.sauter-controls.com
e-mail: info@sauter-controls.com
0505840133 A
Printed in Switzerland